Space Machine & Engineering CORP.

Double Ridge Waveguide Topwall Couplers

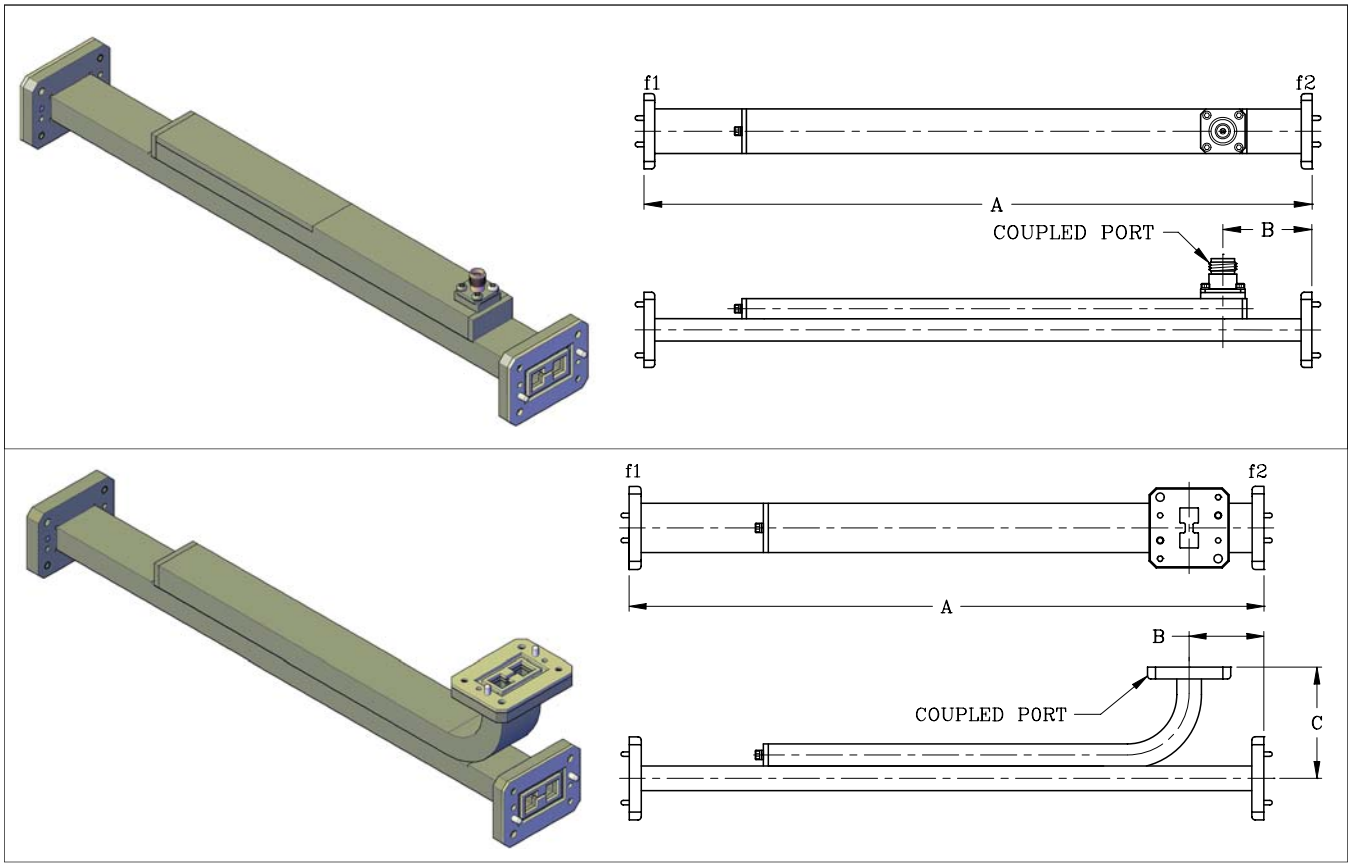

Space Machine custom fabricates a standard product line of double ridge topwall couplers covering waveguide sizes WRD180 thru WRD200. Coupling variation is typically ± 2dB over the full waveguide band. Directivity is 20dB minimum. Additional sizes and configurations are available upon request. See next page for standard dimensions.

Ordering Information:

	DRT	wrd	-m	c	cp	-f1 f2	-p	f
Double Ridge Topwall Coupler, WRD500, Aluminum, 30dB Coupling, Type N Female Coupled Port, Gasket Flanges, Chromated, Paint Space Machine Gray. **Example part number:**	DRT	500	-A	30	NF	-02 02	-C	P

Series (DRT):

Waveguide Size (wrd): WRD180 thru WRD200

Material (-m): A – Aluminum

Coupling (c): 20 - 60 dB

Coupled Port (cp): Connector – See Appendix E,
Flange – See Appendix H

Flange (-f1 f2): See Appendix H

Plating (-p): C – Chromate, S – Silver, G – Gold, O – Other, N – None

Finish (f): P – Paint Space Machine Gray, N – None, O – Other

2327 16TH AVENUE NORTH, ST. PETERSBURG, FLORIDA 33713 * PHONE (727) 323-2221 * FAX (727) 323-2376

Double Ridge Waveguide Topwall Coupler Dimensions

Model	WRD #	Frequency (GHz)	A	B	C
DRT180-	180	18.00 - 40.00	12.00	1.30	1.40
DRT110-	110	11.00 - 26.50	16.00	1.30	1.70
DRT750-	750	7.50 - 18.00	22.00	1.60	2.00
DRT650-	650	6.50 - 18.00	22.00	1.60	2.00
DRT580-	580	5.80 - 16.00	22.00	1.60	2.00
DRT500-	500	5.00 - 18.00	22.00	1.60	2.00
DRT475-	475	4.75 - 11.00	32.00	1.80	2.40
DRT350-	350	3.50 - 8.20	35.00	2.00	2.70
DRT250-	250	2.60 - 7.80	40.00	2.20	3.00
DRT200-	200	2.00 - 4.80	40.00	2.75	5.00

All dimensions are in inches.

2327 16TH AVENUE NORTH, ST. PETERSBURG, FLORIDA 33713 * PHONE (727) 323-2221 * FAX (727) 323-2376