Space Machine & Engineering CORP.

Double Ridge Waveguide Dual Topwall Couplers

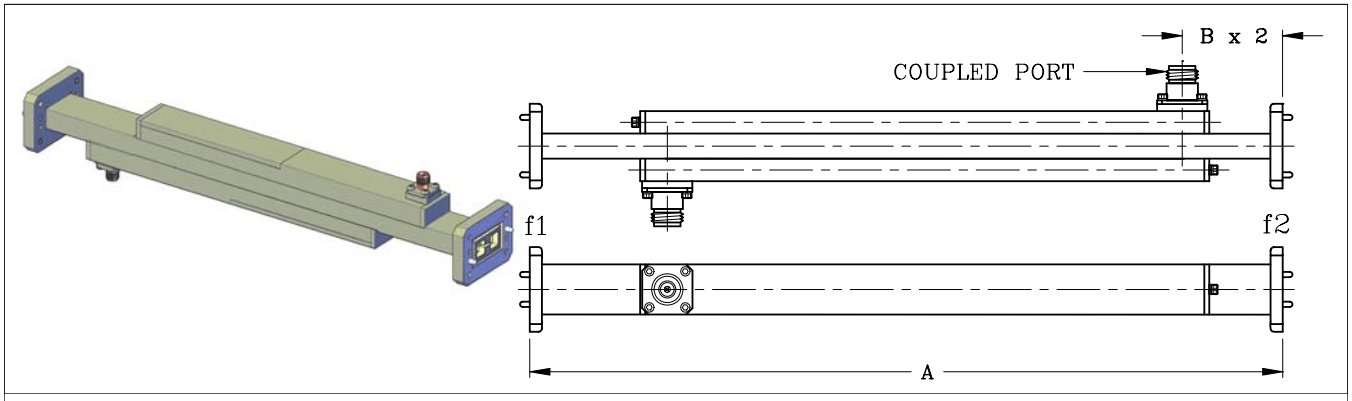

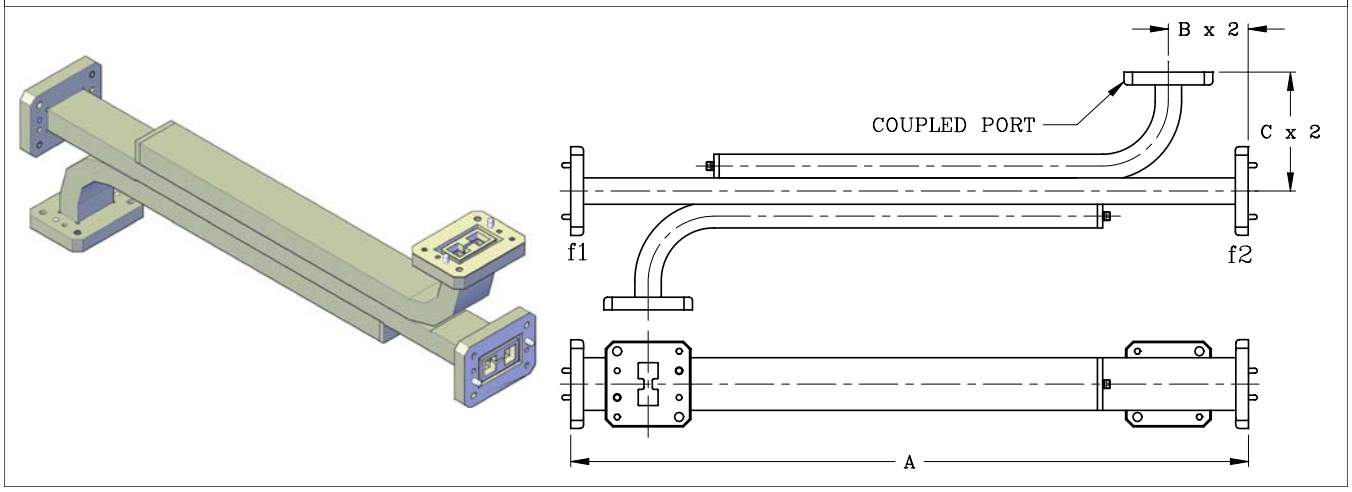

Space Machine custom fabricates a standard product line of double ridge dual topwall couplers covering waveguide sizes WRD180 thru WRD200. Coupling variation is typically ± 2dB over the full waveguide band.
Directivity is 20dB minimum.
Additional sizes and configurations are available upon request. See next page for standard dimensions.

Ordering Information:

		DRB	wrd	-m	c	cp	-f1 f2	-p	f
Double Ridge Dual Topwall Coupler, WRD500, Aluminum, 30dB Coupling, Type N Female Coupled Port, Gasket Flanges, Chromated, Paint Space Machine Gray.	**Example part number:**	DRB	500	-A	30	NF	-02 02	-C	P

Series (DRB):

Waveguide Size (wrd): WRD180 thru WRD200

Material (-m): A – Aluminum

Coupling (c): 20 – 60 dB

Coupled Port (cp): Connector – See Appendix E,
Flange – See Appendix H

Flange (-f1 f2): See Appendix H

Plating (-p): C – Chromate, S – Silver, G – Gold, O – Other, N – None

Finish (f): P – Paint Space Machine Gray, N – None, O – Other

2327 16TH AVENUE NORTH, ST. PETERSBURG, FLORIDA 33713 * PHONE (727) 323-2221 * FAX (727) 323-2376

Double Ridge Waveguide Dual Topwall Coupler Dimensions

Model	WRD #	Frequency (GHz)	A	B	C
DRB180-	180	18.00 - 40.00	15.00	1.30	1.40
DRB110-	110	11.00 - 26.50	20.00	1.30	1.70
DRB750-	750	7.50 - 18.00	24.00	1.60	2.00
DRB650-	650	6.50 - 18.00	24.00	1.60	2.00
DRB580-	580	5.80 - 16.00	24.00	1.60	2.00
DRB500-	500	5.00 - 18.00	24.00	1.60	2.00
DRB475-	475	4.75 - 11.00	36.00	1.80	1.40
DRB350-	350	3.50 - 8.20	40.00	2.00	2.70
DRB250-	250	2.60 - 7.80	42.00	2.20	3.00
DRB200-	200	2.00 - 4.80	44.00	2.75	5.00

All dimensions are in inches.

2327 16TH AVENUE NORTH, ST. PETERSBURG, FLORIDA 33713 * PHONE (727) 323-2221 * FAX (727) 323-2376