Space Machine & Engineering CORP.

Double Ridge Waveguide Loop Couplers

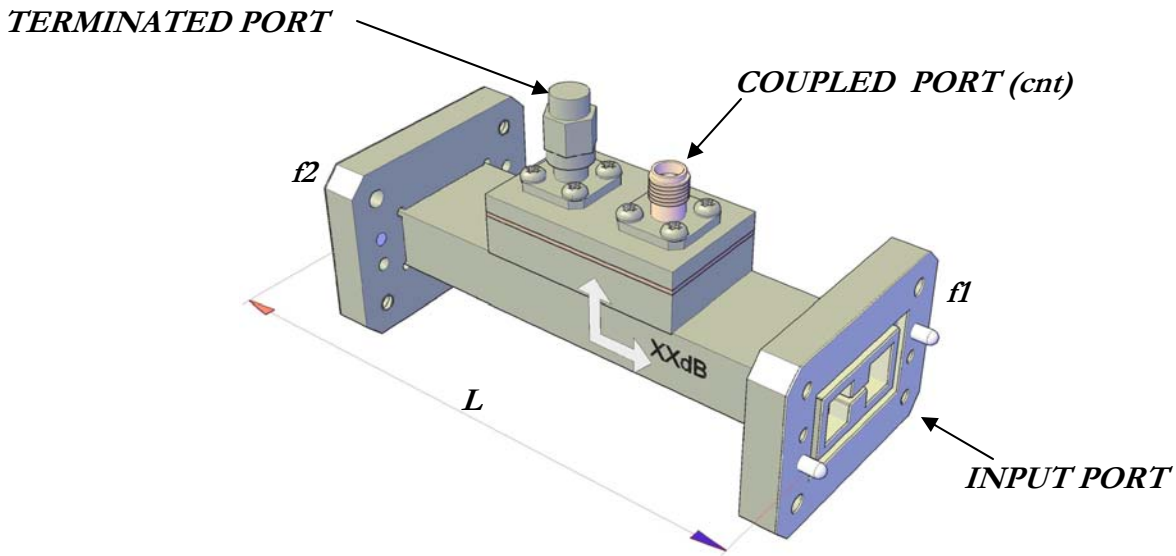

Model	WRD #	Frequency (GHz)	Length (L)
DLC750-	750	7.50 - 18.00	3.00
DLC650-	650	6.50 - 18.00	3.00
DLC580-	580	5.80 - 16.00	3.00
DLC500-	500	5.00 - 18.00	3.00

Model	WRD #	Frequency (GHz)	Length (L)
DLC475-	475	4.75 - 11.00	3.50
DLC350-	350	3.50 - 8.20	3.50
DLC250-	250	2.60 - 7.80	4.00
DLC200-	200	2.00 - 4.80	5.00

Space Machine custom fabricates a standard product line of double ridge loop couplers covering waveguide sizes WRD750 thru WRD200. These loop couplers are ideally suited for 25% bandwidths with coupling variation of ± 0.5dB. Over the full waveguide band, coupling variation is ± 2.5dB. Directivity is 15dB minimum.
Main arm VSWR is 1.15:1 and secondary arm VSWR is 1.3:1.

Ordering Information:

	DLC	wrd	-m	c	cnt	-f1 f2	-p	f
Example part number:	DLC	500	-A	30	SF	-02 02	-C	P

Double Ridge Loop Coupler, WRD500, Aluminum, 30dB Coupling, SMA Female Coupled Port, Gasket Flanges, Chromated, Paint Space Machine Gray.

Series (DLC):

Waveguide Size (wrd): WRD180 thru WRD200

Material (-m): A – Aluminum

Coupling (c): 30 - 60 dB

Connector Type (cnt): See Appendix E

Flange (-f1 f2): See Appendix H

Plating (-p): C – Chromate, S – Silver, G – Gold, O – Other, N – None

Finish (f): P – Paint Space Machine Gray, N – None, O – Other

2327 16TH AVENUE NORTH, ST. PETERSBURG, FLORIDA 33713 * PHONE (727) 323-2221 * FAX (727) 323-2376